NAMA PEMILIK PROYEK : **PT PERTAMINA EP**

NAMA PROYEK : **JASA PEMBANGUNAN FASILITAS PRODUKSI STASIUN PENGUMPUL (SP) TANJUNG MIRING BARAT & KARANGAN TIMUR**

LOKASI : **SP TANJUNG MIRING BARAT & KARANGAN TIMUR - FIELD LIMAU**

NO. KONTRAK : **SA02035383B**

REV.	TGL.	DESKRIPSI	DISIAPKAN	DIPERIKSA	DISETUJUI	DIPERIKSA	DISETUJUI
A	09/01/2026	Issued For Review	MHP	AS	MR		
			PT. PROSYMPAC OIL & GAS			PT. PERTAMINA EP	

TABEL REVISI

Rev.	Tanggal	Deskripsi

COMMENT RESPONSE SHEET

No.	Page	PERUSAHAAN's Comment	Contractor's Response	Remarks

DAFTAR ISI

TABEL REVISI **2**
COMMENT RESPONSE SHEET **3**
DAFTAR ISI **4**
Gambar Thermowell with Flange (RF) connection **5**
1. DATA SHEET FOR TEMPERATURE TRANSMITTER **6**
1.1 TEMPERATURE TRANSMITTER LIST 7

Figure of Thermowell with Flange (RF) Connection

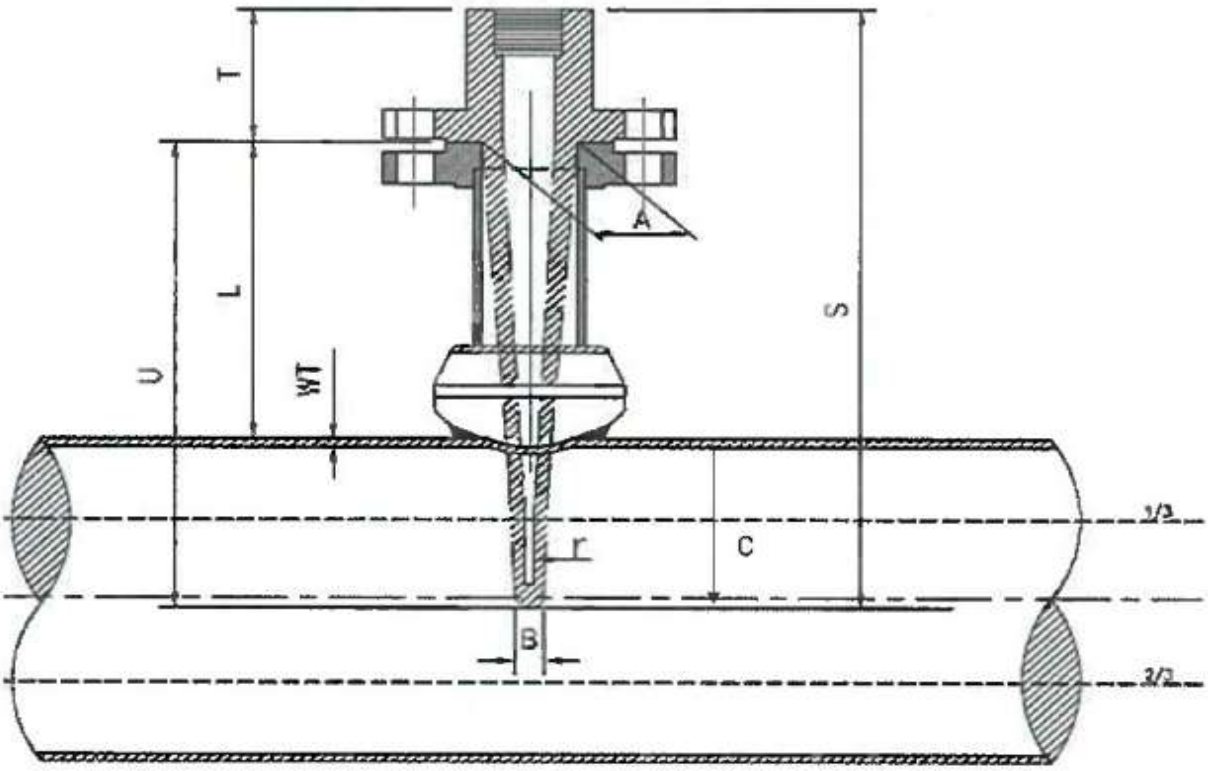

ABBREVIATION

A : ROOT DIAMETER
B : TIP DIAMETER
r : BORE DIAMETER
L : FLANGE LENGTH
S : OVERALL LENGTH
T : CONNECTION LENGTH
U : INSERTION LENGTH
WT : WALL THICKNESS
C : IMMERSION LENGTH

skkmigas PERTAMINA EP	**PERTAMINA EP** **REGIONAL 1 ZONA 4**	PGG

DATA SHEET FOR TEMPERATURE TRANSMITTER	No. Dok. : TMBP-SP001-IN-DST-D108 Rev. : A Halaman : 6 dari 7

Tag Number	: See List	Service	: See List
P&ID No.	: See List	Equip./Line No.	: See List

PROCESS CONDITION	1	Fluid	State	See List		See List	
	2	Operating Pressure	Design Pressure	See List	psig	See List	psig
	3	Operating Temperature	Design Temperature	See List	degF	See List	degF
	4	Spesific Gravity		See List			
	5	Capacity		See List	ft^3/lb		
PIPE DATA	6	Type		Nozzle			
	7	Size, Rating		2", ANSI 150# RF			
	8	Schedule		Std. Wt.			
	9	Material		A105			
GENERAL	10	Accuracy		± 0.2% of Full Scale			
	11	Mounting		Direct			
	12	Enclosure Class		IP65			
	13	Hazardous Area Classification		Zone 2, Group IIA, Class T3			
	14	Certification		Eex"d"			
TEMPERATURE TRANSMITTER	15	Case Material		Aluminum die cast			(1)
	16	Electrical Connection		½" NPTF			
	17	Output		4-20 mA DC, SMART Type			
	18	Power Supply		24 VDC			
	19	Span Adjusment		YES			
	20	Zero Adjusment		YES			
	21	Calibration Range		See List			
	22	Instrument Range		(-328)-1562 degF			
	23	Instrument Display		Integrated LCD			
	24	Linearizer		YES			(3)
	25	Cold Junction Compensation		N/A			
	26	Mounting		Direct			
TEMPERATURE ELEMENT	27	Element Type		RTD PT100, 3-wire			
	28	Required Number of Sensor		Single			
	29	Sheath Material		316SS			
	30	Outside Diameter Sheath		¼			
	31	Sheath Length		To Suit Thermowell			(3)
	32	Mounting Thread to Well		½" NPTM			
	33	Connection Wire to Transmitter		½" NPTF			
	34	Assembly		Integrated with Transmitter			
THERMOWELL	35	Tag Number		See List			
	36	Type		Drilled bar stock - Tappered			
	37	Material		316SS			
	38	Process Connection		2" Flange, ANSI Class 150# RF			
	39	Internal Threaded		½" NPTF			
	40	Immersion Length		7"			(3)
	41	Insertion Length		8"			(3)
	42	Sore Diameter		Manufacture Standard			(3)
	43	Strength Calculation		ASME PTC 19.3			(3)
REMARKS	44	Name Plate (Tagging Number)		YES, 316SS			(1)
	45	Manufacture		As per AML / PML			(2)
	46	Model No.		By VENDOR			(3)

Notes:

1. Temperature Transmitter shall be provided with nameplate In 316 SS
2. VENDOR shall be refer to PT. PERTAMINA HULU ROKAN Approved Manufacturers List (AML)
3. VTA (Vendor to advise)
4. Thermowell shall be made in conformity with ASME PTC 19.3 calculations. Stress analysis calculation shall be performed and supplied by VENDOR. Wake frequency ratio shall not exceed 0.8 in accordance with ASME PTC 19.3.
5. Thermowell insertion length shall be 2/3 pipe ID and minimum 8" for vessel.
6. Thermowells shall be stamped with the tag number, type (bar stock), material, nominal U length and process connection.

skkmigas PERTAMINA EP	**PERTAMINA EP** **REGIONAL 1 ZONA 4**	PGG
	DATA SHEET FOR TEMPERATURE TRANSMITTER	No. Dok. : TMBP-SP001-IN-DST-D108 Rev. : A Halaman : 7 dari 7

TEMPERATURE TRANSMITTER LIST

No.	Tag Number	Thermowell Tag Number	P&ID No.	Service	Equip./Line Number	Fluid	State	Temperature (°F)		Pressure (Psig)		Specific Gravity				Capacity			Calibration Range (degF)
								Oper.	Design	Oper.	Design	Gas	Oil	Gross	Liquid	MMSCFD	BLPD	BPD	
1	TT-V-001-001	TW-V-001-001	TMBP-SP001-PR-PID-D101	PRODUCTION SEPARATOR TMB	V-001	FUEL	LIQUID	90	200	50	230	0.0037	0.94	0.110	-	0.59	3240	-	0-250 degF
2	TT-V-003-001	TW-V-003-001	TMBP-SP001-PR-PID-D101	TEST SEPARATOR TMB	V-003	FUEL	LIQUID	50	100	50	100	0.0035	0.947	0.88	-	0.05	677	-	0-145 degF
3	TT-V-002-001	TW-V-002-001	TMBP-SP001-PR-PID-D102	PRODUCTION SEPARATOR KRG	V-002	FUEL	LIQUID	90	200	50	230	0.0037	0.94	0.110	-	0.71	7919	-	0-145 degF
4	TT-V-004-001	TW-V-004-001	TMBP-SP001-PR-PID-D102	TEST SEPARATOR KRG	V-004	FUEL	LIQUID	90	150	50	100	0.0035	0.947	0.88	-	0.18	736	-	0-145 degF
5	TT-V-005-001	TW-V-005-001	TMBP-SP001-PR-PID-D114	PRODUCTION SCRUBBER	V-005	PROCESS GAS	GAS	90	150	32	100	0.17	-	-	51.26	1.45	-	-	0-145 degF
6	TT-V-006-001	TW-V-006-001	TMBP-SP001-PR-PID-D115	KNOCK OUT DRUM VESSEL	V-006	FUEL	LIQUID	300	300	1.93	50	0.013	-	-	0.84	2	-	50	0-145 degF
7	TT-V-007-001	TW-V-007-001	TMBP-SP001-PR-PID-D116	CLOSED DRAIN VESSEL	V-007	PROCESS LIQUID	LIQUID	90	150	0.5	50	-	-	-	-	0.00157	-	842.93	0-145 degF